Josephine Palencia Copyright @Nov 22, 2004

APPLICATIONS –
Computational Optics

Josephine Palencia Copyright @Nov 22, 2004

APPLICATIONS – Computational Optics

R.G. Lyon
12/1-2/04

OSCAR Modeling

Coronagraphic Telescope Example

Optical Systems Characterization And Analysis Research Software

- Developed over 17 years (R. Lyon)
- Parallel C/MPI on Beowulf clusters
- OSCAR:
  - Dense polarization raytrace
  - Multiple plane diffraction w/polarization
  - Aberrations, detector, speckle/scatter,
  - WFS, Optical Control, DMs etc…
- Models:
  - Telescopes, Coronagraphs
  - Interferometers, Hypertelescopes
- Not easy to use:
  - Translate Zemax or Code V prescription
  - No GUI
  - Used by R. Lyon

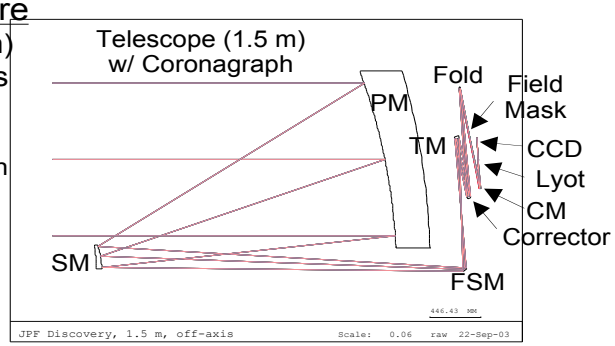

Polarization
(raytrace/diffraction)

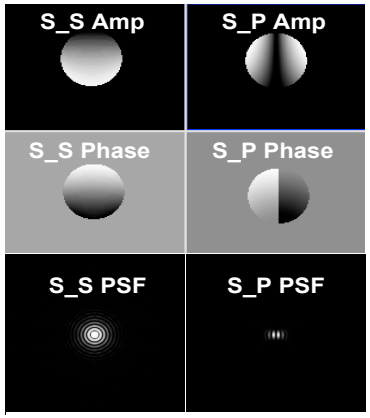

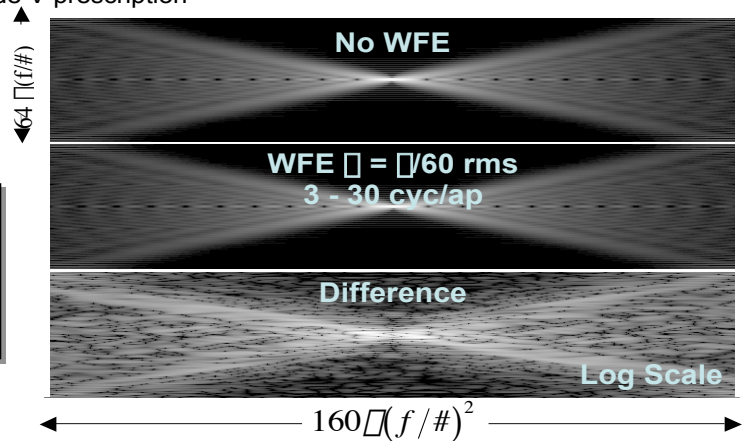

Through to Detector

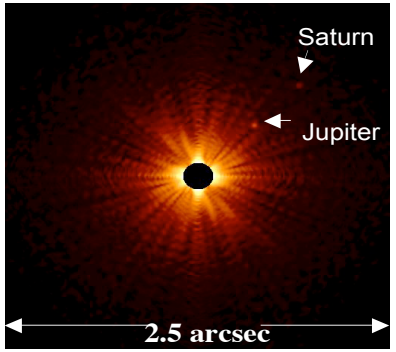

No commercial code has OSCAR's capabilities

Josephine Palencia Copyright @Nov 22, 2004

APPLICATIONS – GRID on 10gE

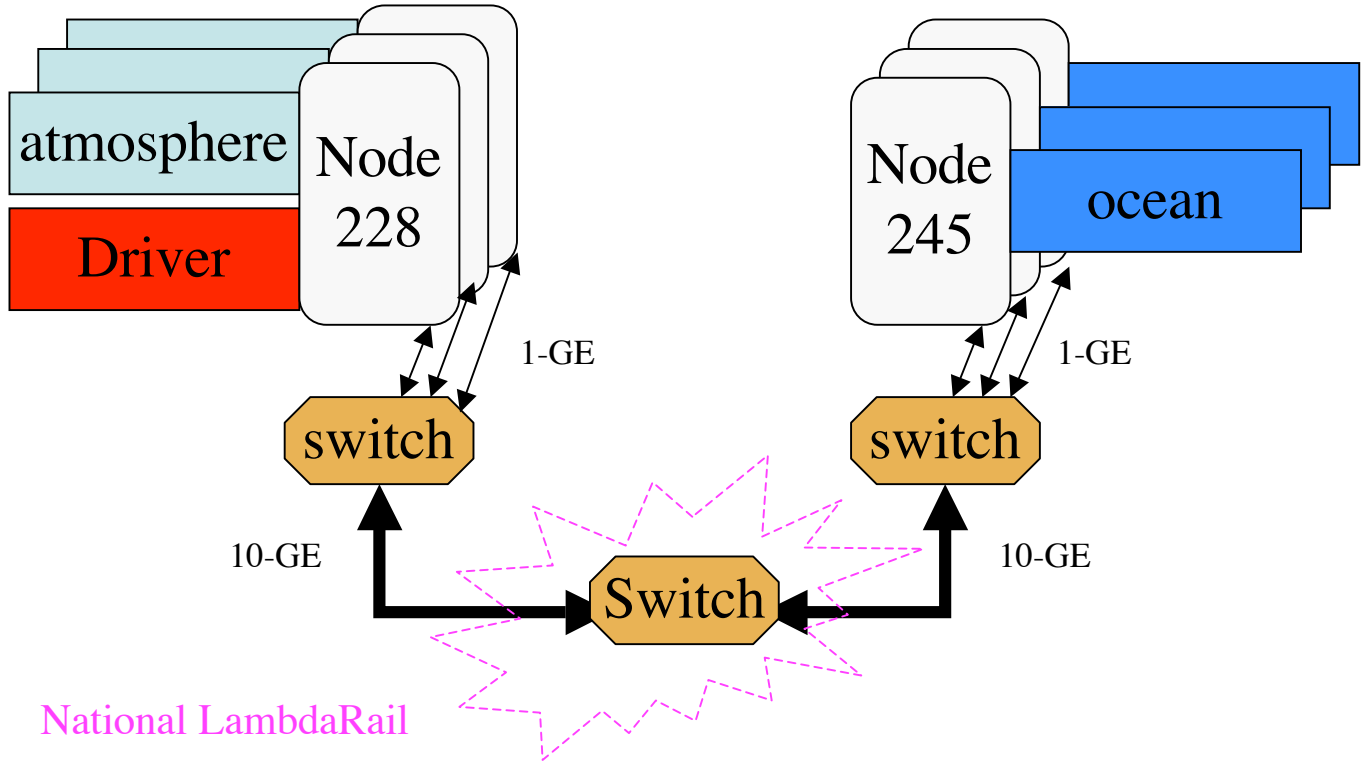

Dr. Shujia Zhou (Northrop Grumman/TASC) demonstrates a prototype of the Grid-enabled ESMF based on DOE's CCA/XCAT framework across a 10gE link among nodes in Thunderhead connected via the Lambda Net. This implementation is a follow-up to the effort that Zhou described in more detail at http://esto.nasa.gov/conferences/estc2004/papers/a4p1.pdf.